# Power Module Output Connector

## Power Module Version - Press Fit

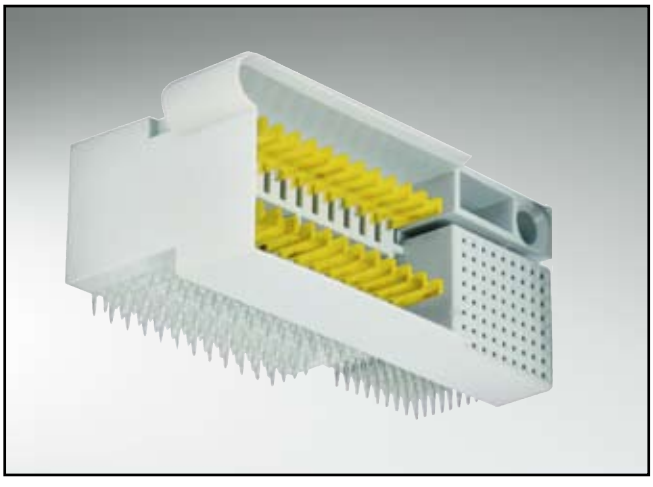

### Product Features

MicroTCA specified connector for power modules.

- 24 power contacts and 72 signal contacts
- Symmetrical footprint
- "Eye of the needle" press fit zone
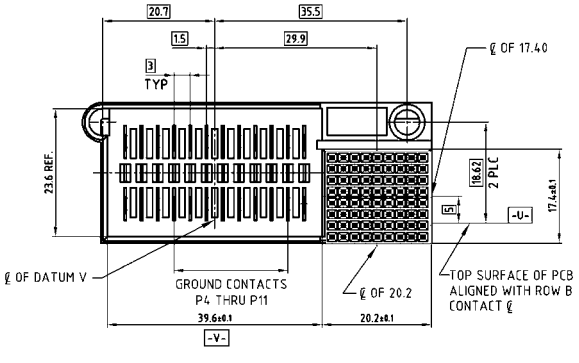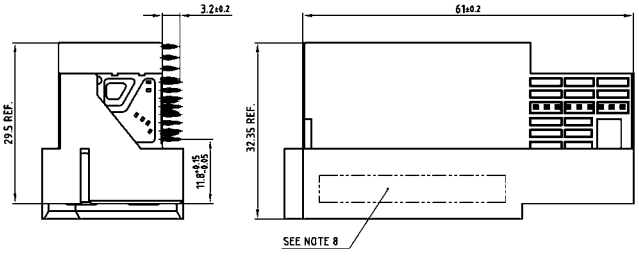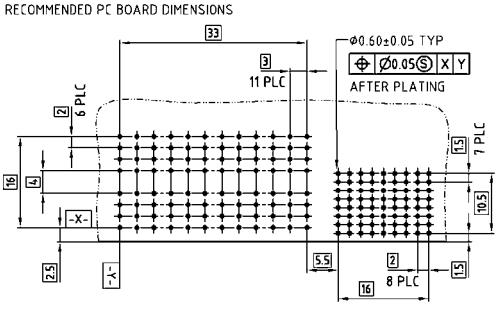
### Technical Data